كلية المشرق للعلوم والتكنولوجيا

امتحانات الفصل الدراسي (2) – 2008/ 2009 م

المستوى : الرابع	القسم : هندسة الإلكترونيات & هندسة الإتصالات	المادة: الكترونيات القدرة
30 / 7 /2009م	عدد صفحات الامتحان : 2	الزمن : 3 ساعات

-Answer 5 questions Only including Question One:
-All questions have equal Marks
-Use Circuit Diagrams to explain your answers

Q1:

i/ Define each of the following and mention its function:

1/ SCR 2/Electromic switch 3/Triac

4/ GTO 5/ power conversions

ii/ if the following signal was applied to the circuit shown. Find the Load voltage and Draw its signal if the box was :

1/ SCR with $\tau = 0.0025$ second 2/Normal Diode

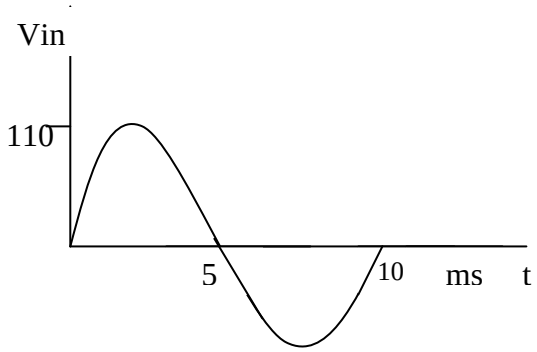

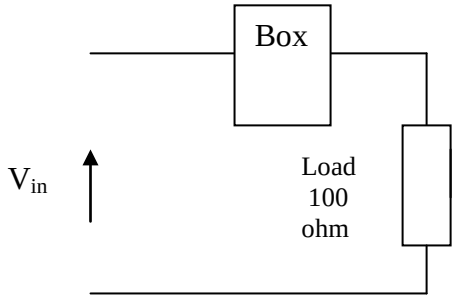

Q2:

For the battery charger circuit shown, if :

Vs = 220 v , and chopping frequency is 60 Hz

The charging current ripple varies between -1 and 1 A.

T_{on} = 5ms, ignoring the GTO drop voltage:

i/ What is the inductance Value?

ii/ Explain the function of the diode ?

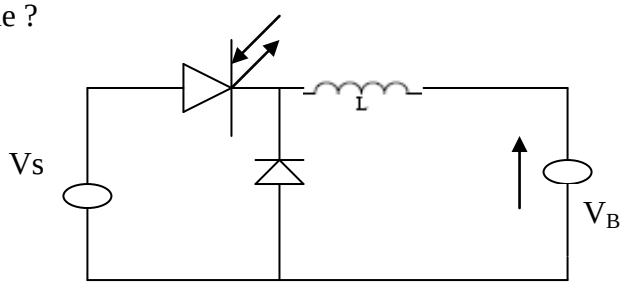

Q3:

A load of 12 ohm is to be regulated using a practical voltage regulator . draw the circuit of this regulator if the source is 22 V , R_B = 50 , Vz =10 v, V_{BE} = 2v

Find load current and the power rating at the BJT of the regulator.

Q4:

Explain the operation of the following circuit and draw the output waveform if the clock frequency shown is applied to the Base of the transistor.

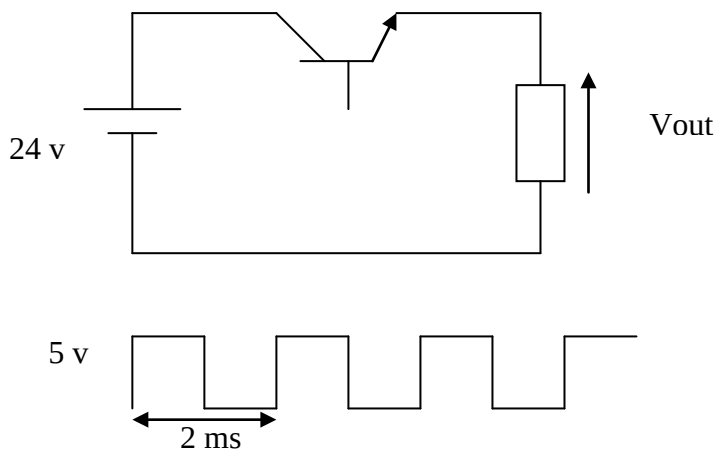

if we need a sine wave at V_{out} , how can we obtain it?

Q5:

Describe the operation of the square inverter using 4 switching transistors to generate a sine wave of 50 Hz from a battery source, and explain the type of the filter you can use.

Q6:

i/ Describe the operation of an AC to AC converter circuit using the Triac and

ii/ Explain the operation of this circuit if we replaced the Triac with one SCR.

Hint:

Assume $V_{in} = V_m \sin\omega t$